Car Parking Guard Circuit Using Infrared Sensor

ABSTRACT

While parking the car the driver should be more careful because he cannot see the back of the car while parking or taking reverse, if there is any obstacle and runs over it might get damaged. Our project will help the person in the driving seat and give alarm if there is any obstacle or a wall while parking or while driving in reverse.

Working

- The reverse indicator light supply is given to the 7805 regulator to give 5v to the rest of the circuit. The diode D6 is used to eliminate the reverse current and wrong supply polarity.
- When the car is driving in reverse the car battery will provide DC supply the reverse light indicator at the back of the car when this supply came to the reverse light indicator the circuit will have the power supply.7805 will regulate the DC voltage to 5V and give to the IR Sensors through the transistor with 20 KHz modulating frequency of the LM567 (TONE DETECTOR) available at Pin5. The resistor R1 will resists the IR senor current. At this point the pin8 of LM567 is high which will enable the LM555 timer operating in astable multivibrator mode. The output of the timer is enabled which can be assured by the LED (blinking) and also buzzer will beeps at determined rate given by the resistors R6, R7 and capacitor C7. The timer output also is given to the lamp through a transistor. The lamp will blink as a warning signal because of the PWM signal generated by the timer, transistor will work as a switch and resistor R10 will limit the current.

This condition is maintained until the 20 KHz signal is received by the pin3 of the LM567.

- The above condition is when there is no obstacle in the path of the car while taking reverse. If there is a obstacle the IR beam will radiate back to the IR sensor and the 20KHz modulated signal is given to the pin3 of LM567 through photo Darlington transistor, at this point the pin8 of the LM567 is turned to low and also gets locked to detect the 20Khz signal. By this the LM555 is turned low and disabled by this the led will remain lighting and buzzer makes the continuous sound to alert the driver.

Components

- 555
- 576
- buzzer
- led
- Passive components
- Voltage regulator
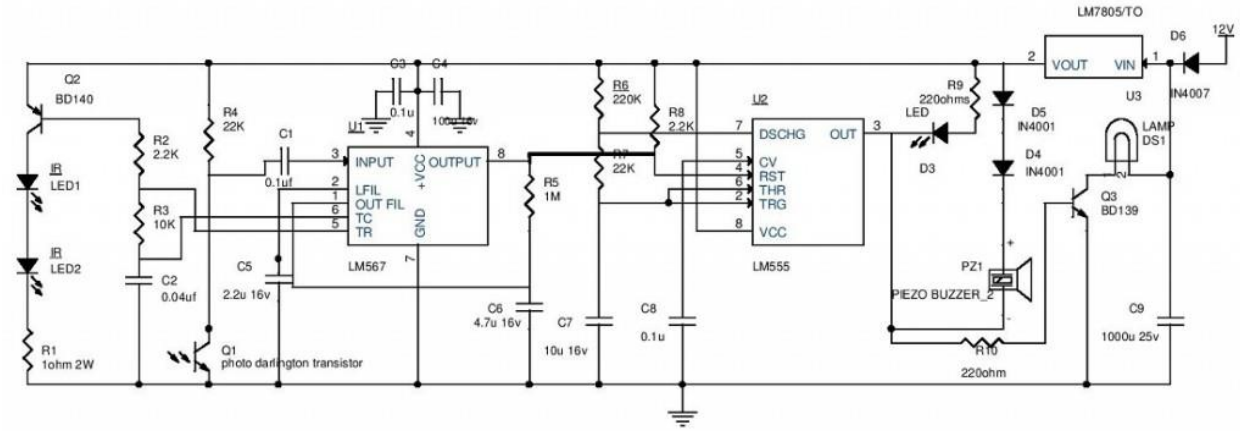
Circuit Diagram